ABOUT US

Welcome to Industrial Access Systems Ltd, Scotland's leading provider in specialised tracked access equipment. We can provide all your access requirements regardless of how complicated from 1m to 100m.

We hire specialised tracked spider boom lifts that operate from 16m to 23m designed for indoor and outdoor use, this equipment can get into places no other machines can reach. Or are your needs simpler???

We also provide scissor lifts, self propelled booms, truck mounted platforms or a varying array of scaffold solutions meaning we can assist any or all of your works.

Along with the hire and sales side of our company we are also a fully accredited IPAF training centre operating from just off the M8 in Glasgow where we offer multiple courses in working at height safely.

WE CAN SUPPLY ALL YOUR ACCESS REQUIREMENTS

TRAINING

IPAF

FULLY ACCREDITED TRAINING CENTRE IN THE HEART OF GLASGOW OR ONSITE

INDUSTRIAL ACCESS SYSTEMS

0141 774 9095

WWW.INDACCESS.CO.UK

16M
R160

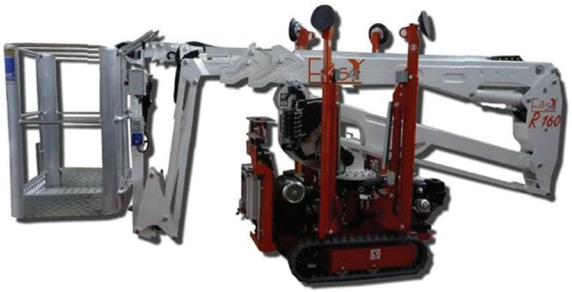

Working Height	15.6m
Width/HT	890/1980mm
Weight	1950Kg
Length	4.7m
Footprint	2800mmx2800mm

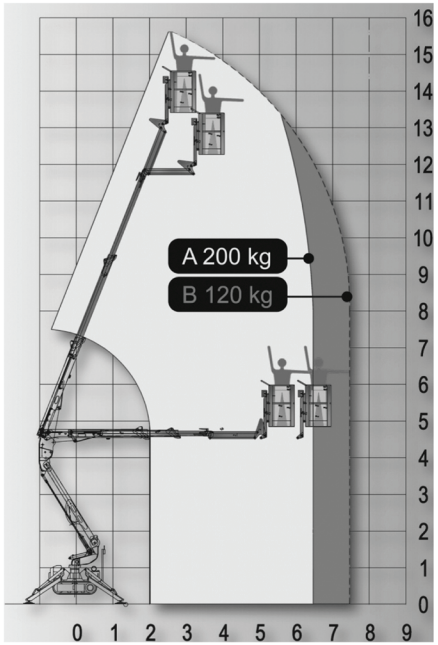

19M
R190

Working Height	18.5m
Width/HT	890/1980mm
Weight	2800Kg
Length	4.9m
Footprint	3500mmx3500mm
Footprint Narrow	2500mmx4200mm

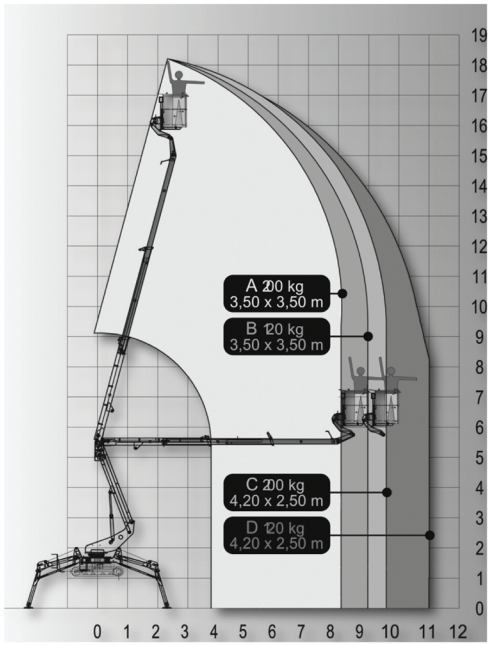

23M
SMX225

Working Height	22.5m
Width/HT	1020/1980mm
Weight	2500Kg
Length	4660mm
Footprint	3400mmx3562mm
Footprint Narrow	2800mmx4281mm

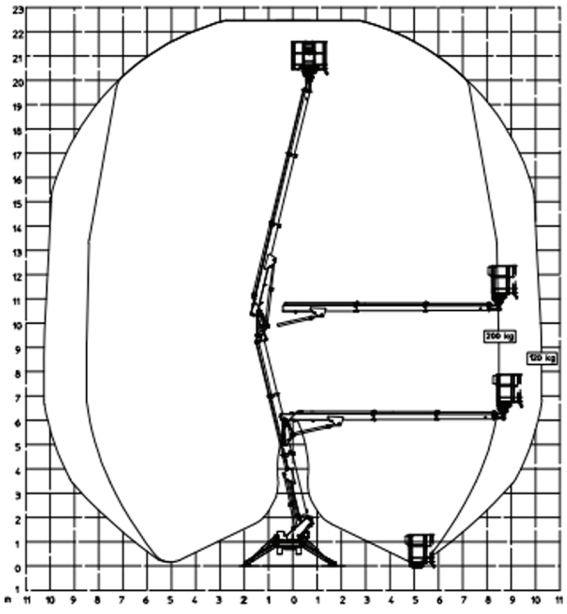

CALL 0141 774 9095 **EMAIL: info@indaccess.co.uk** **WEB: www.indaccess.co.uk**